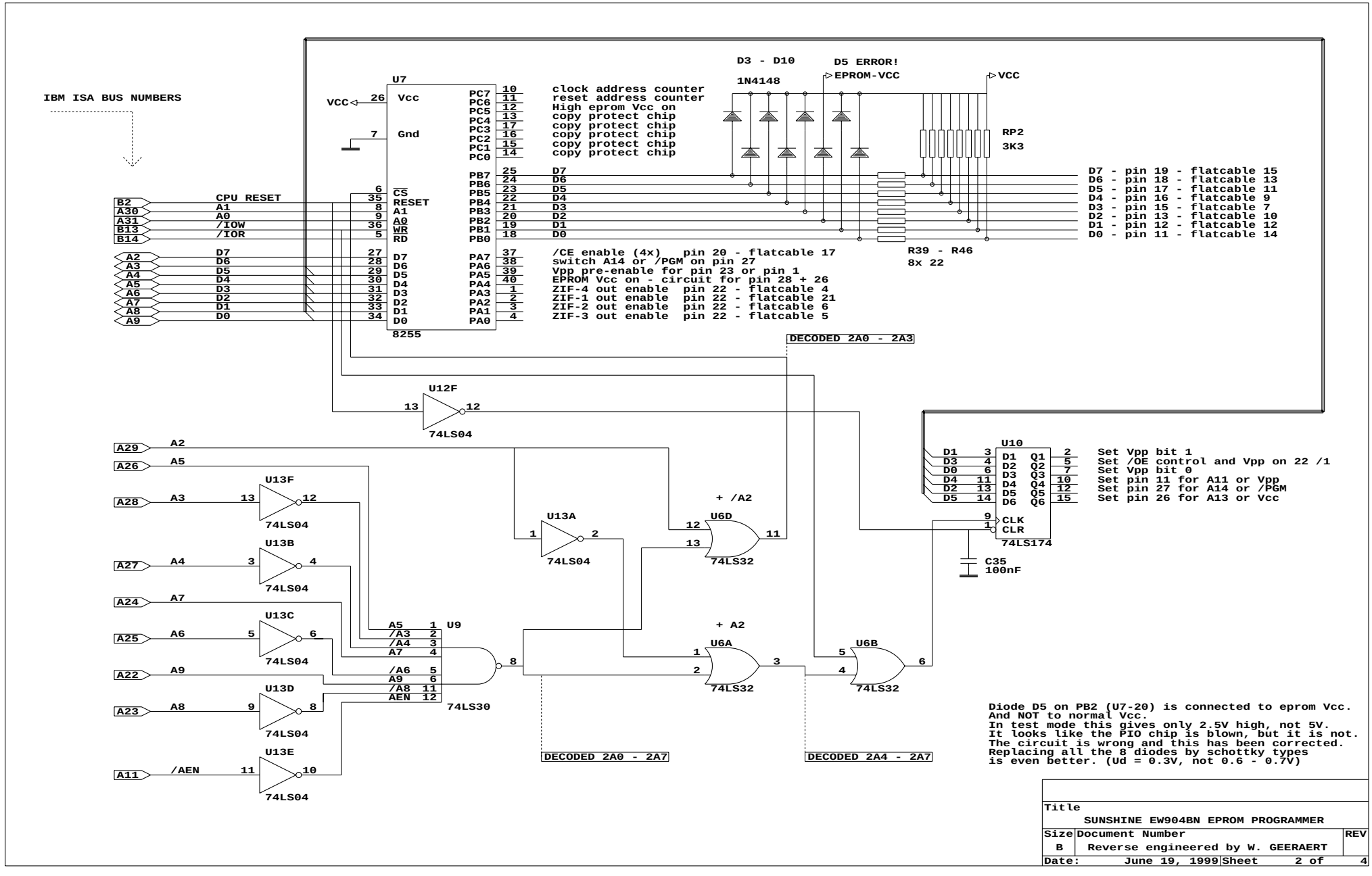
IBM ISA BUS NUMBERS
U7
8255
VCC
Vcc
Gnd
PC7 PC6 PC5 PC4 PC3 PC2 PC1 PC0
PB7 PB6 PB5 PB4 PB3 PB2 PB1 PB0
PA7 PA6 PA5 PA4 PA3 PA2 PA1 PA0
CS
RESET
A1
A0
WR
RD
D7 D6 D5 D4 D3 D2 D1 D0
CPU RESET
/IOW
/IOR
clock address counter
reset address counter
High eprom Vcc on
copy protect chip
copy protect chip
copy protect chip
copy protect chip
copy protect chip
D3 - D10
1N4148
D5 ERROR!
EPROM-VCC
VCC
RP2
3K3
R39 - R46
8x 22
D7 - pin 19 - flatcable 15
D6 - pin 18 - flatcable 13
D5 - pin 17 - flatcable 11
D4 - pin 16 - flatcable 9
D3 - pin 15 - flatcable 7
D2 - pin 13 - flatcable 10
D1 - pin 12 - flatcable 12
D0 - pin 11 - flatcable 14
/CE enable (4x) pin 20 - flatcable 17
switch A14 or /PGM on pin 27
Vpp pre-enable for pin 23 or pin 1
EPROM Vcc on - circuit for pin 28 + 26
ZIF-4 out enable pin 22 - flatcable 4
ZIF-1 out enable pin 22 - flatcable 21
ZIF-2 out enable pin 22 - flatcable 6
ZIF-3 out enable pin 22 - flatcable 5
DECODED 2A0 - 2A3
U12F
74LS04
U10
74LS174
Set Vpp bit 1
Set /OE control and Vpp on 22 /1
Set Vpp bit 0
Set pin 11 for A11 or Vpp
Set pin 27 for A14 or /PGM
Set pin 26 for A13 or Vcc
C35
100nF
U13F
U13B
U13C
U13D
U13E
U13A
U6D
U6A
U6B
+ /A2
74LS32
U9
74LS30
DECODED 2A0 - 2A7
DECODED 2A4 - 2A7
Diode D5 on PB2 (U7-20) is connected to eprom Vcc.
And NOT to normal Vcc.
In test mode this gives only 2.5V high, not 5V.
It looks like the PIO chip is blown, but it is not.
The circuit is wrong and this has been corrected.
Replacing all the 8 diodes by schottky types
is even better. (Ud = 0.3V, not 0.6 - 0.7V)
Title
SUNSHINE EW904BN EPROM PROGRAMMER
Size B
Document Number
Reverse engineered by W. GEERAERT
REV
Date: June 19, 1999
Sheet 2 of 4